THE BUILDING APPROVAL COMPANY

NCC 2022 OCTOBER CHANGES LIVABLE HOUSING AND MORE

CONTENTS

LIVABLE HOUSING

1 October 2023 sees the introduction of the Livable Housing Provision. The requirements apply to new houses and units and impact dwelling access and entrance, internal doors, and corridors as well as sanitary compartments and showers.

The Livable Housing design provisions do not apply to residential buildings other than Class 1a and Class 2 dwellings.

PART	Apartments (Class 2) Volume One	Dwellings (Class 1a) Volume Two
Dwelling Access	X	✓[1]
Dwelling Entrance	✓	✓
Internal doors and corridors	✓	✓
Sanitary compartments	✓	✓
Shower	✓	✓
Reinforce bathroom and sanitary compartment walls	✓	✓

Notes: 1. Subject to concessions specified in Volume Two H8D2.

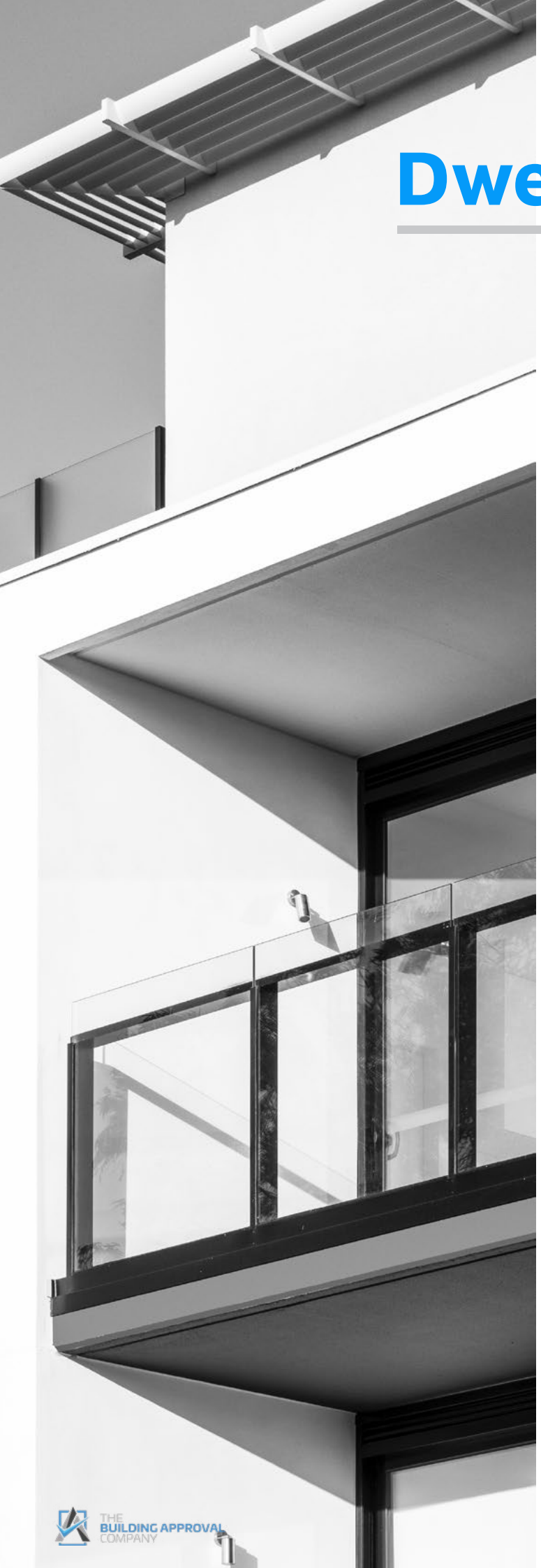

Dwelling Access

Step free path from boundary or parking

The step free access path must be provided to the dwelling entrance.
This access can be from either:

- the allotment boundary.
- a Class 10a garage, carport belonging to the dwelling.
- a parking space within the allotment that is provided for the exclusive use of the occupants of the dwelling.

The access pathway must:

- have no steps;
- a step ramp can be provided with a maximum gradient of 1:14 in the direction of travel;
- if crossfall is provided, has a crossfall not more than 1:40
- the path and ramp must have a minimum width of 1000mm
- if it incorporates a section suspended above finished ground level, that section must be able to take loading forces in accordance with AS/NZS 1170.1
- connects to a dwelling entrance door that meets the minimum width requirements.
- any gates along the access path must have a minimum clear opening width of 820mm, measured as if the gate were an entrance door.
- a deck or boardwalk-style path constructed in accordance with AS 1684 or NASH Standard – Residential and Low-rise Steel Framing would satisfy the requirements.

Dwelling Access (cont.)

If ramps are used then:

The interval between landings must not be more than 9m for a 1:14 gradient; or 15m for a 1:20 gradient; or a length determined by linear interpolation for ramps with a gradient between 1:14 and 1:20 (see Appendix 1).

The minimum width of the ramp must be maintained at 1000mm between any handrails and/or kerbs (if provided) at each side of the ramp.

At each end of a ramp there must be a landing that is not less than 1200mm long; and at least as wide as the ramp to which it connects; and level or has a gradient not more than 1:40 if a gradient is necessary for drainage.

A landing area is required at the entrance door and this may also be counted as a landing at the end of the ramp.

The access path may incorporate one step ramp provided:

The height is not more than 190mm, the gradient is not more than 1:10; and width of at least 1000mm or equivalent to that of the access path, whichever is the greater; and maximum length of 1900mm.

Example: Step ramp with landings

Step ramp with landings to safely transition between ramp and paths.

Example of a step ramp with landings (dimensions in mm)

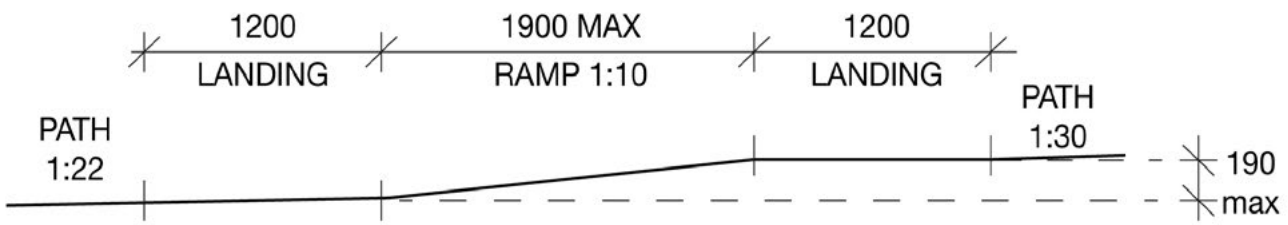

Dwelling Access (cont.)

Example of a step ramp with landings (dimensions in mm)

Ramp gradient	Maximum ramp length (m)
1:14	9
1:15	10
1:16	11
1:17	12
1:18	13
2:19	14
1:20	15

Parking space incorporated into step-free access path

Where one or more car parking spaces are connected to or form part of a required access path, at least one of the car parking spaces must have a minimum unobstructed car parking space of 3200mm wide x 5400mm long; and a gradient not more than 1:33 for bitumen, or 1:40 for any other surface material.

A required access path means an access path provided for the purposes of compliance with step-free path access.

Options for incorporating a car parking space in the access path (dimensions in mm)
Example of a step ramp with landings (dimensions in mm)

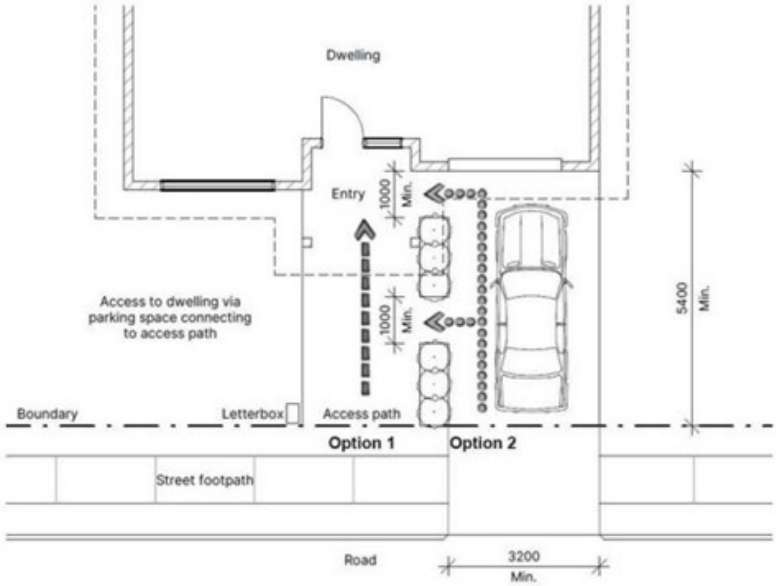

Dwelling Entrance

A dwelling entrance door may be a door other than the front door, provided that the door connects to the step-free access path provided. For example, compliance could be achieved via a side door that is connected to the garage via a step-free path.

Clear Opening Width

At least one entrance door to the dwelling must have a minimum clear opening width of 820mm.
The minimum clear opening width required must be measured clear of door leaf and frames, clear of door stops or door rebates in the door jamb. An 820mm clear opening width, for a single swinging door, can generally be achieved using an 870mm door leaf.

Double doors, bi-fold doors, stacking doors, multiple sliding door panels and other types of hinged door sets may use a smaller leaf provided the overall clear opening width with the doors fully open is not less than 820mm.

Clear opening width for sliding doors must be measured with the door panel(s) installed and in the fully open position. The door handle may encroach the required minimum clear opening width.

Plan view of a typical door frame with a swing door (dimensions in mm)

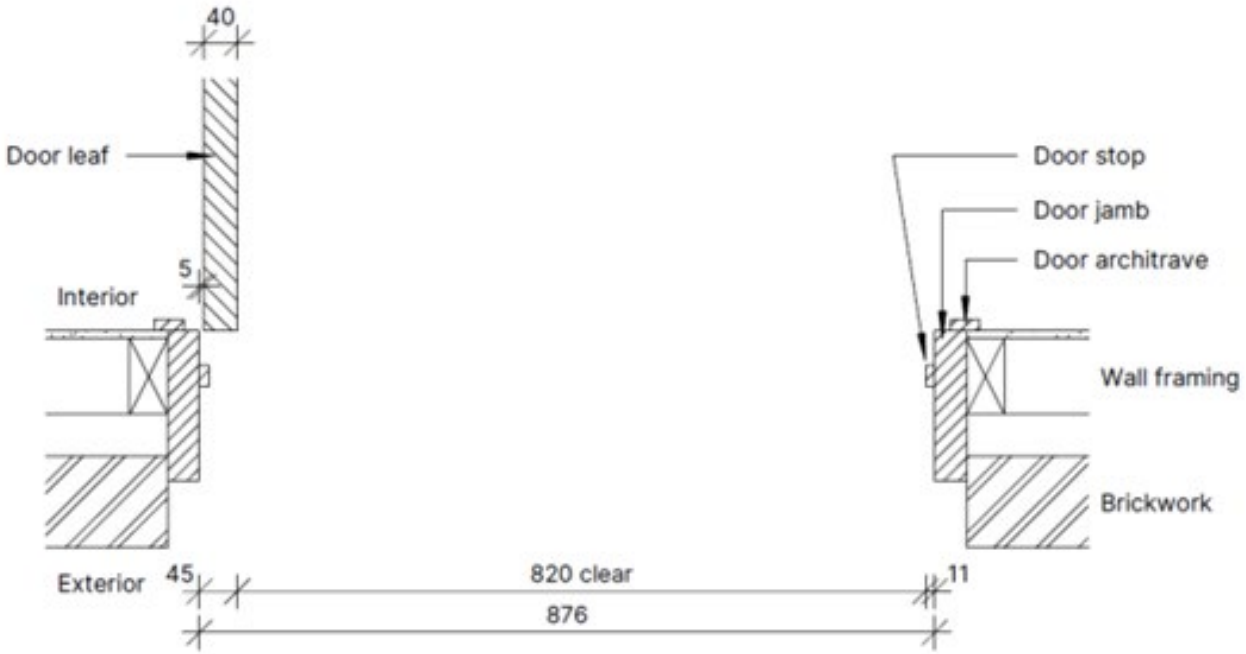

Dwelling Entrance (cont.)

Threshold

The threshold of the dwelling entrance must be level or have a sill height not more than 5mm if the lip is rounded or bevelled; or have a ramped threshold that does not extend beyond the depth of the door jamb; and has a gradient not steeper than 1:8; and is at least as wide as the minimum clear opening width of the entrance door; and does not intrude into the minimum dimensions of a landing area that is required

Where the above requirements cannot meet the weatherproofing requirements of the NCC, for external entrance doors containing a raised door or sill you can have no lip or upstand greater than 15mm within the sill profile; and have no more than 5mm height difference between the edge of the top surface of the sill and the adjoining finished surface.

Example: Threshold options for external step-free entrance

Option 1: Level threshold (example of rebated door threshold)

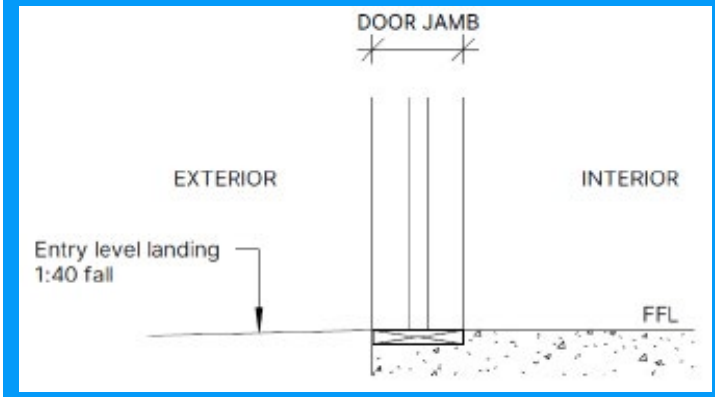

Option 2: Threshold sill 5 mm above entry level and landing (dimensions in mm)

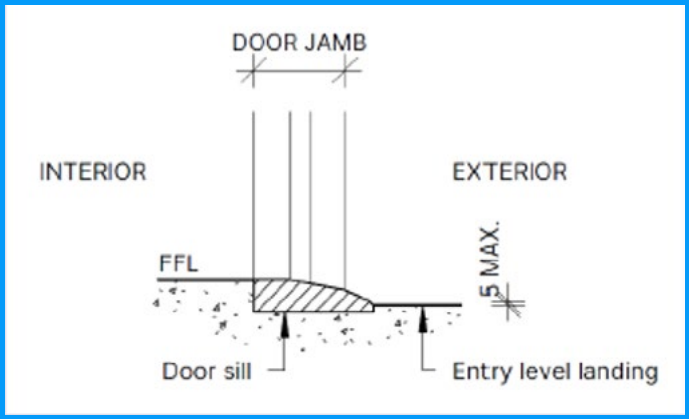

Option 3: Threshold ramp (confined within depth of door jamb)

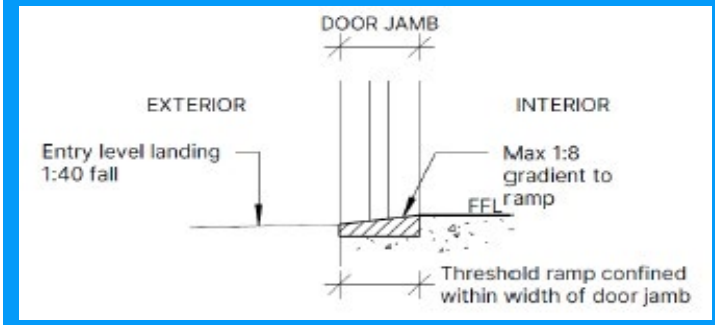

Option 4: Threshold with no lip or upstand greater than 15 mm within the sill profile, with 5 mm maximum height difference with adjoining finished floor surface levels (FFL, dimensions in mm)

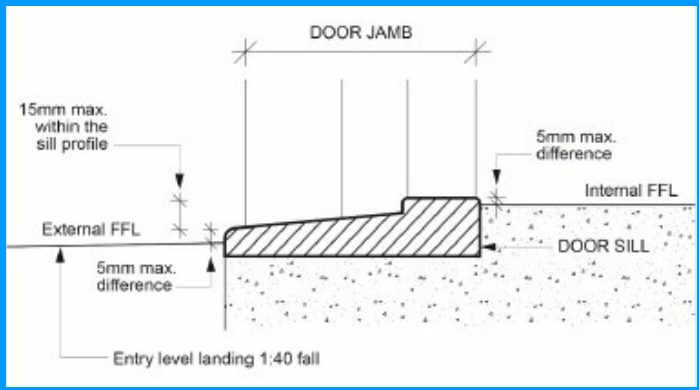

Dwelling Entrance (cont.)

Landing area

The following applies to class 1a building only and does not apply to a dwelling that is exempt from providing step free access or where access is provided via a garage or carport.

The entrance door provided must have a space of at least 1200mm x 1200mm on the external (arrival) side of the door that is unobstructed (other than by a gate or a screen door), it must be level or has a gradient not more than 1:40 if a gradient is necessary to allow for drainage.

If the dwelling landing is served by a ramp, the ramp will need to meet the slip resistance requirements in Volume Two and the housing provision.

Weatherproofing for external step-free entrance

Weatherproofing for an external step-free entrance must be provided in accordance with one or a combination of the following:

- Where the external surface is concrete or another impermeable surface, a channel drain that meets the requirements of Volume Two H2D2 is to be provided for the width of the entrance. This means the drainage channel must meet AS/NZS 3500.3 or the Housing Provision drainage section. The drainage channel must run across the length of the door opening.
- Where the external entrance area surface is deck or another permeable surface, the drainage surface below also needs to meet the requirements of H2D2 (Drainage) of Volume Two, and AS 3959 (for designated bushfire prone areas).
- A roof covering an area no smaller than 1200mm by 1200mm, where the area is provided with a fall away from the building not greater than 1:40. Note any posts, columns, or other supports for the roof cover must not obstruct the minimum 1200 mm x 1200 mm space required for the landing area in front of the entry door.

Internal Doors and Corridors

Internal doorways that connect to habitable rooms, laundry, shower or sanitary compartments on the ground or entry level must provide a minimum clear opening width of 820mm.

They must be level or have a height not more than 5 mm if the lip is rounded or bevelled; or have a ramped threshold that does not extend beyond the depth of the door jamb; and has a gradient not steeper than 1:8; and is at least as wide as the minimum clear opening width of the doorway it serves.

The internal corridors, hallways, passageways that connect to these areas must have a minimum clear width of 1000mm, measured between the finished surfaces of opposing walls.

Skirting boards, architraves, timber mouldings, skirting tiles, door stops, conduits, general power outlets and the like may be disregarded for the purposes of compliance with the minimum corridor width. Door hardware may encroach the required minimum corridor width.

Sanitary Compartment

There must be at least one sanitary compartment located on the ground entry level of the dwelling.

A separate toilet sanitary compartment there must be a clear width of not less than 900mm between the finished surfaces of opposing walls either side of the toilet pan.

A room containing a toilet pan, any fixed obstruction, such as a basin or a vanity unit, must be located at least 450mm from the centreline of the toilet pan normal to the front face of the cistern.

Both must have a clear minimum circulation space of 1200mm by 900mm from the front edge of the toilet pan.

Circulation space for a toilet pan

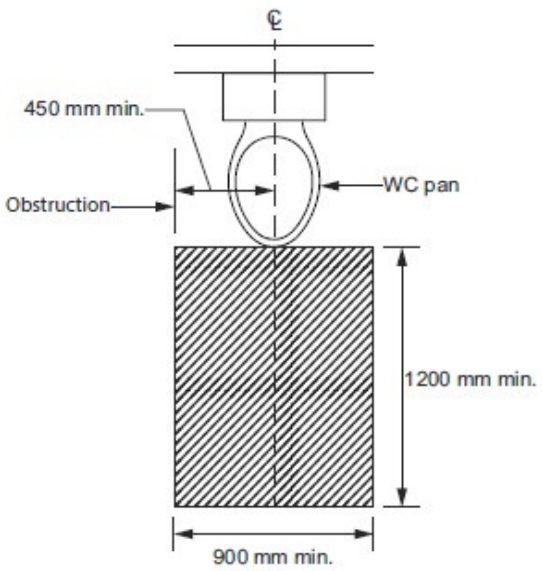

Example: Applying the circulation zone

Applying the circulation zone - toilet in separate compartment (dimensions in mm)

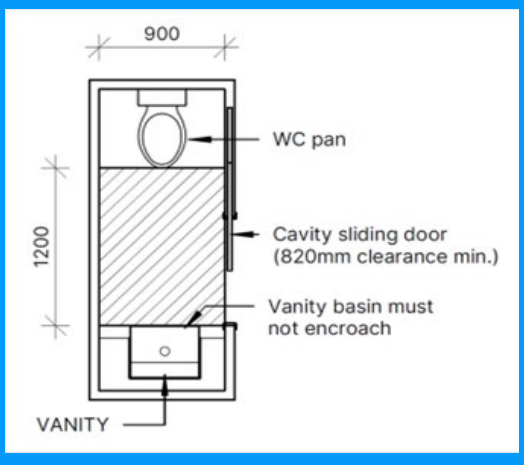

Applying the circulation zone and the 450mm clearance from obstructions with bath adjacent (dimensions in mm)

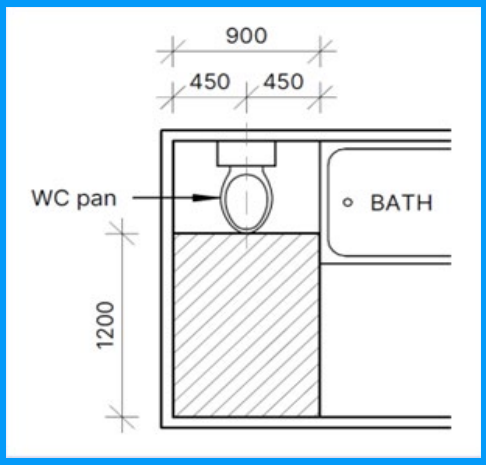

Shower

At least one shower in the dwelling needs to comply with the Livable Housing requirements.

This shower does not have to be located on the ground or entry level of the dwelling.
At least one shower must have a hobless and step-free entry. A lip no more than 5mm in height may be provided for water retention purposes.

Reinforcement of Bathroom and Sanitary Compartment Walls

It is intended that at least one toilet, shower and/or bath can support the future installation of grabrails.

Reinforcement of sanitary compartment bathroom walls must be provided to the sanitary compartment on the entrance level and the bath/shower room that complies to the Livable Housing provision.

Reinforcement is not required if the walls of the room are constructed of concrete, masonry, or another material capable of supporting grabrails.

Freestanding baths are excluded as there are no adjoining walls.

Where the wall includes a cavity slider it must be designed and constructed to support the loads improved by reinforcement and the future provision of grabrails.

Reinforcing must be constructed from a minimum of 12mm thick structural grade plywood, or similar with timber noggings with a minimum thickness of 25mm or light gauge steel framing noggings or metal plate in accordance with the NASH Standard.

The code is detailed in exactly how the reinforcement must be applied and please refer to the following diagrams.

Taps, bath niches, soap holders and similar may be located within the reinforcing area.

If the height of the bathtub is not known at the time of framing an assumed height of 500mm above finished floor level may be used to determine the area for reinforcement.

There are some concessions where the wall required to be reinforced is narrow than the width shown in the ABCB Standard or where there is a window within the area.

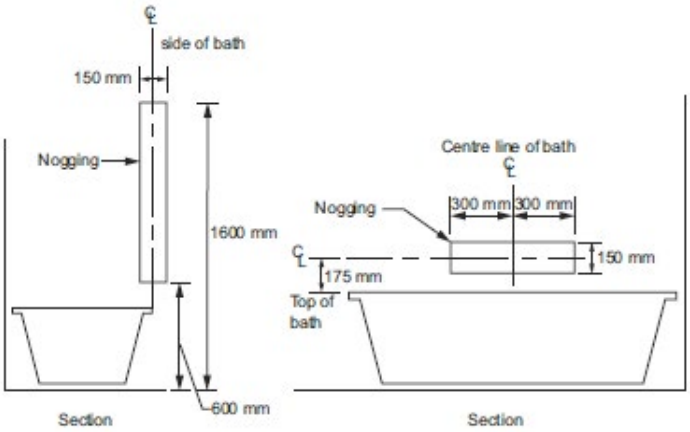

cont.

Location of sheeting for walls surrounding a bath

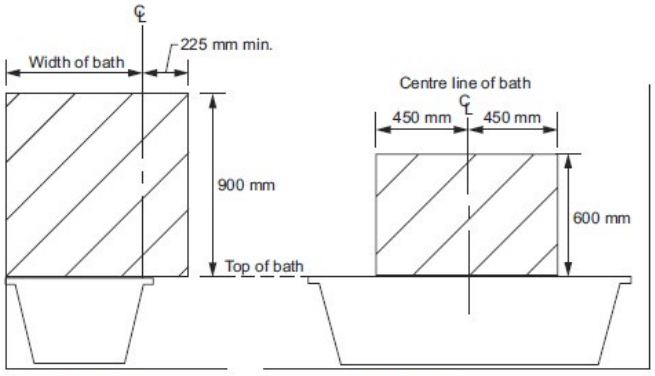

Location of noggings for shower walls

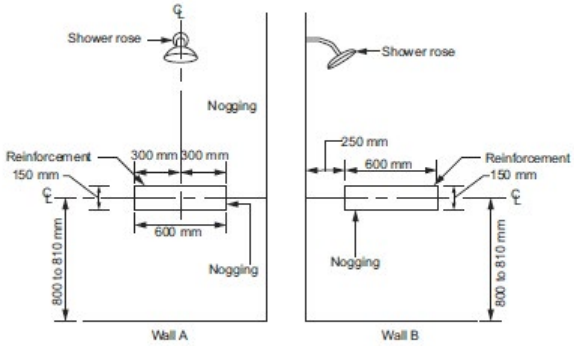

Location of sheeting for shower walls

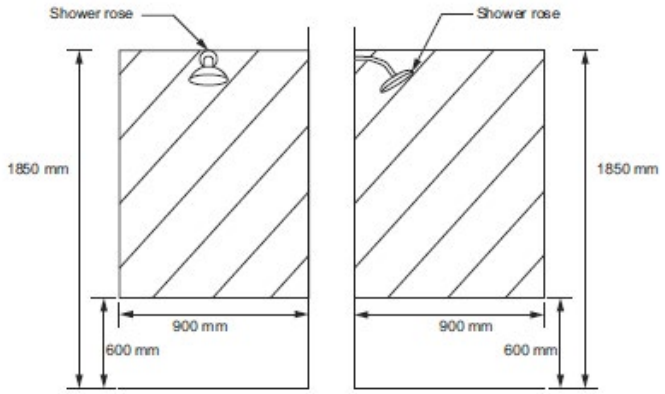

Minimum extent of sheeting for wall adjacent to a toilet pan

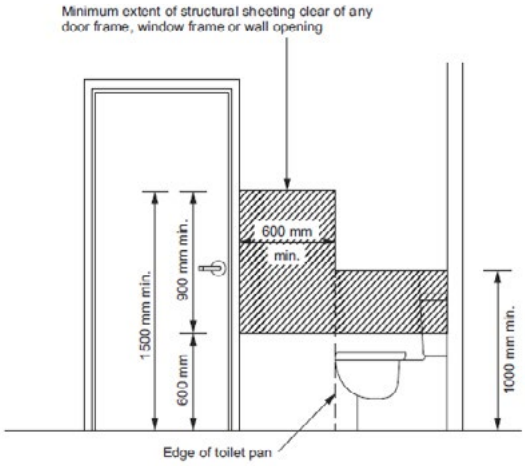

Location of noggings for a wall behind a toilet pan

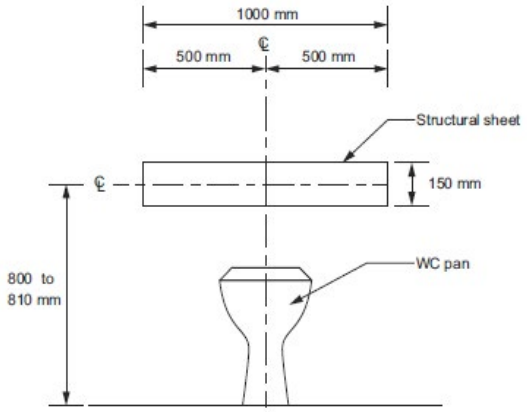

Location of sheeting for a wall behind a toilet pan

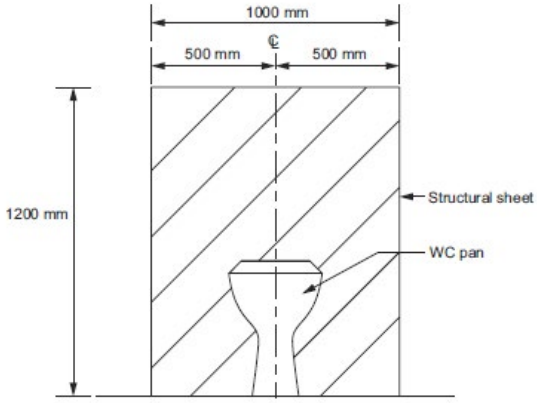

Application in Class 2 Apartments

Example: Application of Part D4 and livable housing requirements to a Class 2 building with lift access to each floor

Each apartment (SOU) has an acessible floor accessed from a common area and Part D4 and Part G7 apply.

Class 2 building where both Part D4 access provisions and Part G7 livable housing provisions apply

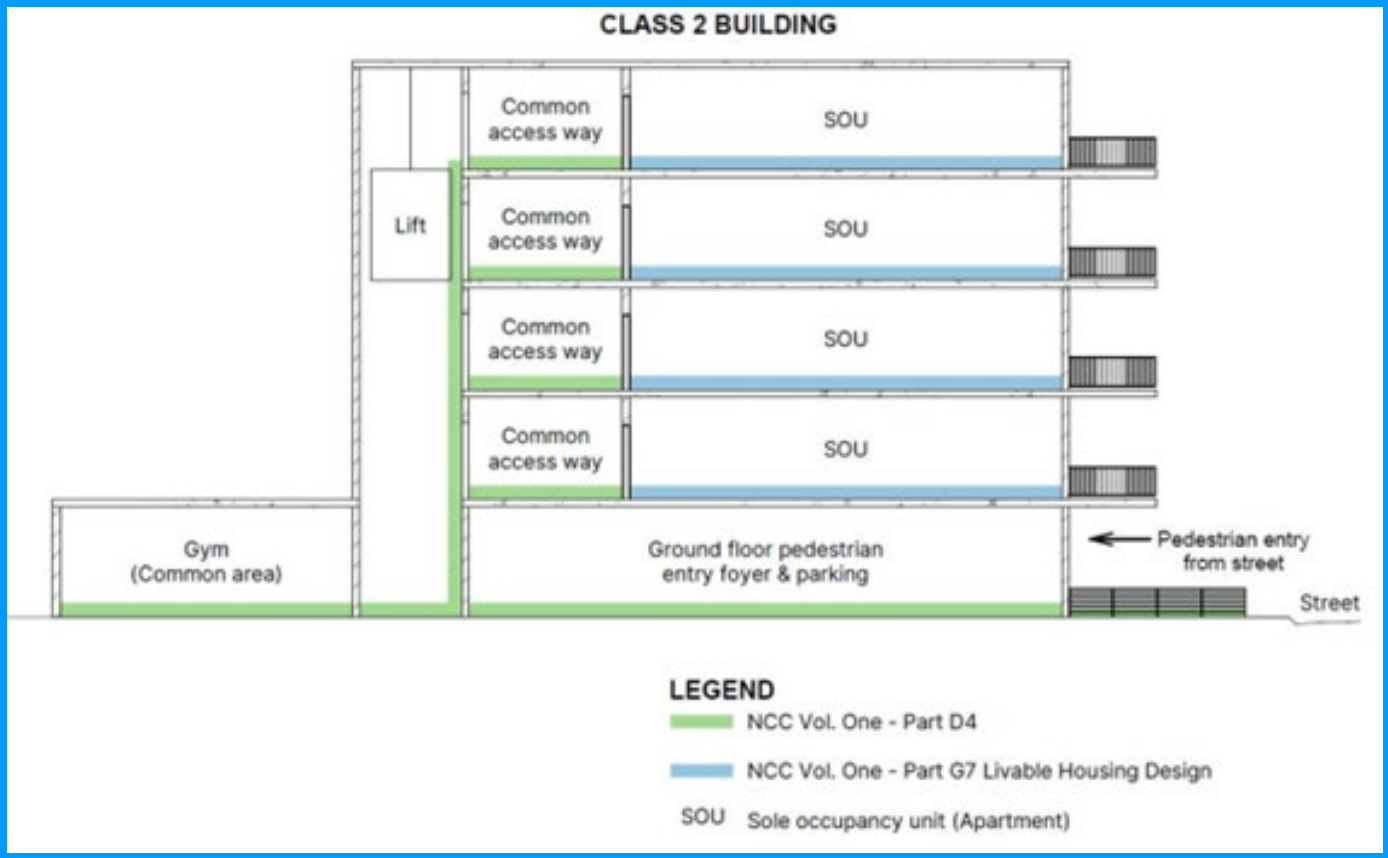

ENERGY EFFICIENCY

There are increased standards for all new homes and apartments (C lass 1 and 2 buildings) with two major changes:

Class 1 buildings / new homes star rating increase from 6 to 7 stars. The changes for class 2 buildings will require the building to have an average of 7 stars with no sole occupancy unit being less than 6 stars.

New whole of house energy budget provisions to determine the total energy use of fixed building services with recognition of potential offsets such as solar PV panels. This budget applied to the energy use of home heating and cooling, hot water systems, cooking appliances, lighting, swimming pool and spa pumps. It allows for renewable energy systems such as rooftop solar panels and batteries which will be factored into the home energy use budget.

The changes will impact current standard house designs and building material selections. It is recommended to get an energy assessment at preliminary planning stage to ensure compliance.

The pathway to a 7* rating

There are two pathways to compliance either NatHERS or Deemed To Satisfy where to achieve a seven-star rating will mean:

- Changes to building designs and house layouts.
- Higher windows, roof lights and glazing performance.
- Increases in the required ceiling and wall insulation R-values .
- In some instances, a standard wall frame will require a wall cavity to achieve compliance as well as higher insulation requirements.
- Restrictions on wall and roof colours to lighter colours in various climate zones; and
- Changes to structural floor systems (either insulated slabs or sub-floor insulation in most regions).
- Thermal bridging requirements to mitigate the impact of steel framing in Class 1 dwellings and Class 2 apartments.

6.5* is acceptable via NatHERS provided if the building has an outdoor living area (see description - Specification 42 S42C2).

It is recommended that an Energy Efficiency Consultant is engaged early in the design process to ensure the rating can be met.

CONDENSATION MANAGEMENT

Condensation and water vapour management is added to NCC 2022 with the objective of reducing the likelihood of condensation or water vapour build-up causing illness, injury or loss of amenity for occupants and applies to Class 1 buildings only.

- Minimum flow rates for exhaust fans (3.8.73 Flow rate and discharge of exhaust systems).
- Exhaust requirements for kitchens, kitchen range hoods, bathrooms, sanitary compartments and vented clothes dryers including ducting of exhausts to outdoor areas (3.8.5.2 ventilation requirements).
- Isolated sanitary compartments that are not naturally ventilated are to have exhausts with a 10 minute run off timer.
- Provision of make-up air to some rooms.

REFERENCES

NCC 2022 Volume 1 & 2, Livable Housing and Energy Efficency available free at https://abcb.gov.au/ and access copies of the new Australian standards available at https://store.standards.org.au/explore-standards/building-construction.

Contact us with any questions you have:

enquiries@tbac.com.au
07 4222 9811
www.tbac.com.au/Livablehousing

Disclaimer and warning

THE BUILDING APPROVAL COMPANY